Intervention & Coiled Tubing Association

Canadian Chapter

Technical Session

IRP 21 Update

Introductions

Bailey Epp, VP Engineering & Technology

STEP Energy Services Ltd.

Co-chair, IRP 21 Review

IRP 21 Update

February 8th, 2017

IRP 21 Update

Presentation- *Agenda*

- Overview
- IRP 21 scope & limited review
- Job planning & well classification
- Pressure control barriers- review
- Well servicing categories (table 4)
- BOP stack configurations/ examples
- Impact to industry
- Future review considerations
- Summary

ICoTA

IRP 21 Update

Overview- *Who is involved with IRP 21?*

Professional associations that comprise the Drilling and Completions Committee

CAODC — Celebrating 60 Years

CAPP — Canadian Association of Petroleum Producers

PSAC — Petroleum Services Association of Canada

EPAC — Canada's Oil & Gas Entrepreneurs

Logistics administrated by Enform

ENFORM

DACC — Drilling and Completion Committee

ICoTA

IRP 21 Update

Overview- *Who is involved with IRP 21?*

Committee List

Name	Company	Organization Represented
Don McClatchie (Chair)	Sanjel Corporation	PSAC
Bailey Epp (Co-Chair)	STEP Energy Services Ltd.	PSAC
Adam Alvis	Balanced Energy Oilfield Services Inc.	PSAC
Ossama Bayoumy	Conoco Phillips Canada	CAPP
Dan Brailean	Canyon Technical Services	PSAC
Rick Bruce	Forum Energy Technology	
Greg Chapin	ICoTA Canada	
Rick Eckdahl	Chevron Canada Ltd.	CAPP
Shawn Erick	Lone Star Oilfield Services	
Ryan Grant	Mountain Coil Tubing	PSAC
Dylan Henkelman	WISE Intervention Services Inc.	PSAC
Dean Jenkins	Encana	CAPP
Justin Kitchen	BCOGC	Regulator
Nils MacArthur	Crescent Point Energy	CAPP
Ron MacDonald	AER	Regulator
Justin Meyer	Calfrac Well Services Ltd.	PSAC
Clarke Moir	Shell Canada Ltd.	CAPP
Ben Nowell	Element Technical Services	PSAC
Sam Robb	Trican Well Service Ltd.	PSAC
Ryan Smith	Nexus Energy Technologies	
Jack Thacker	Husky Energy	CAPP
Doug Vaudan	Jewel Energy Services Inc.	PSAC
Tyler Zemenchik	Essential Energy Services	PSAC
Laurie Andrews	Enform (Facilitator/Technical Writer)	
Brianna Walsh	Enform (Support)	

ICoTA

IRP 21 Update

Overview- *What is an Industry Recommended Practice?*

- A set of best practices and guidelines prepared by knowledgeable industry and government experts
- Technical topics related to design, construction, and operations in the oil and gas industry, based on safety management principles

An IRP is not…

- A practice manual or SOP
- A regulation, act, or code

ICoTA

IRP 21 Update

Overview- *What is IRP 21?*

Range of Obligations

Term	Usage
Must	A specific or general regulatory and/or legal requirement that must be followed. These IRP statements are bolded for emphasis.
Shall	An accepted industry practice or provision that the reader is obliged to satisfy to comply with this IRP. These statements are bolded for emphasis.
Should	A recommendation or action that is advised
May	An option or action that is permissible within the limits of the IRP
Can	Possibility or capability

ICoTA

IRP 21 Update

Overview- *What was the original scope?*

- This IRP applies to all coiled tubing drilling and coiled tubing well servicing operations performed in a wellbore. Both overbalanced and underbalanced operations are covered.
- Consideration that the hydrostatic head of the fluid column may no longer be the primary method of well control. The well control equipment is considered the primary well control mechanism preventing the escape of wellbore fluids and ensuring the safety of onsite personnel.

ICoTA

IRP 21 Update

Overview- *What was the original scope?*

- The IRP includes pertinent information about coiled tubing operations including recommendations for the following:
- Operations planning
- BOP stacks and accumulators
- Pipe specifications
- Fluids and circulating systems
- Well pressure-containing equipment
- Elastomeric seals
- Well servicing operations
- Drilling operations

IRP 21 Update

Overview- *What is the limited Review?*

- Editorial Review
  - Consistent wording, terminology, structure
  - Active voice
  - Merging related IRPs into one bulleted list to reduce bolding
  - Cleanup/numbering of headings
  - Update references to current versions
- Definitions of Well Servicing Pressure Categories
  - Updated the generic set of Well Servicing Pressure Categories that encompasses requirements from all jurisdictions and then uses those consistently throughout the IRP
  - Bring IRP classes into alignment with global API Standards
  - Use new categories in remainder of document
- Update well control equipment configurations requirements
  - Bring into alignment with the global API standard
  - Updated diagrams
- Update P-testing IRPs to use MASP/MAOP rather than SITHP
  - Adjusted to reflect new pressure categories and calculation methods

ICoTA

IRP 21 Update

Overview- *Where does IRP 21 apply?*

- An Alberta publication
- Subject Matter Experts from Western Canada appropriate to the topic
- Referenced across Canada & globally
- Increasingly regarded as the Canadian “best practices” guide
- Draw from global oil & gas industry experiences

IRP 21 Update

Job Planning & Well Classification

- Well Control for well servicing includes:
  - Well servicing on existing (previously flowing) wells
  - New completion operations (milling, fracturing, etc.)
  - Coiled tubing drilling operations
- H2S considerations
  - IRP 21-> The well is considered sour when ever > 0 ppm H2S
  - Low pressure (< 10.3 MPa) sour wells are automatically Category 2
  - “Critical Sour” wells determined by local jurisdiction release rate & proximity to urban areas.

ICoTA

IRP 21 Update

Job Planning & Well Classification

Selection of Pressure Control for Blow out Prevention

MASP- **M**aximum **A**nticipated **S**urface **P**ressure

- is the highest pressure predicted to be encountered at the surface of a well. Base the pressure prediction on formation pressure minus a wellbore filled with native formation fluid at current conditions.
- *If the formation fluid is unknown…assume dry gas (worst case)*

$$MASP = Near\ Wellbore\ Reservoir\ Pressure - Hydrostatic\ Pressure\ of\ a\ Column\ of\ Reservoir\ Fluid$$

- **IRP Calculation of MASP shall use the reservoir fluid and not the workover fluid.**

ICoTA

IRP 21 Update

Job Planning & Well Classification

Selection of Pressure Control for Blow out Prevention

MAOP- **M**aximum **A**nticipated **O**perating **P**ressure

- is the highest pressure predicted to be encountered at the surface of a well. Based on induced pressure. (Well kill, Annular fracturing, etc.)

$$\begin{aligned} MAOP = {} & Near\ Wellbore\ Reservoir\ Pressure \\ & - Hydrostatic\ Pressure\ of\ Workover\ Fluid \\ & + Surface\ Induced\ Pressure \end{aligned}$$

IRP **MAOP shall not exceed the pressure rating of any wellhead component that has the potential to be exposed to well intervention pressure.**

ICoTA

IRP 21 Update

Pressure control barriers- *Review*

- Primary barriers
  - CT Integrity
  - Flow Check assembly in BHA
  - Stripper element
- Annular barriers
  - Pipe ram
  - Annular bag
  - Secondary stripper
- H2S presence adds annular barrier
- Complete barriers
  - Flow check assembly in BHA c/w annular barrier (Stripper, Pipe ram, Annular bag)
  - Shear ram & Blind ram
  - Shear/ Blind ram
- Increased pressure category increases complete barriers required

ICoTA

IRP 21 Update

Original Well Servicing Categories

Classification for IRP 21		Provincial Classifications			
CLASS	DESCRIPTION	Alberta	B.C.	Saskatchewan	Manitoba
CLASS I	Reservoir pressure no less than 5.5 MPa, no H_2S and: (i) Is a gas well, or (ii) Produces heavy oil density >920 kg/m³, GOR< 70 sm³/m³ and produces by primary recovery or is included in a waterflood scheme	CLASS I		N/A	N/A
CLASS II	Pressure rating of casing flange ≤ 21,000 kPa and H_2S < 10 moles/kilomole	CLASS II CLASS IIA	CLASS A	N/A	N/A
CLASS III	Pressure rating of casing flange is (i) > 21,000 kPa, or (ii) ≤ 21,000 kPa and H_2S ≥ 10 moles/kilomole	CLASS III	CLASS B	N/A	N/A
CLASS IV	Based on potential H_2S discharge rate and proximity of public as per ERCB and BC Oil and Gas Commission definition	Critically Sour	CLASS C (Special Sour)	N/A	N/A

ICOTA

IRP 21 Update

Understanding Table 4- *General*

Well Servicing Pressure Categories for Blowout prevention

Well Servicing Pressure Category	MASP	Required Complete Barriers	Recommended Kill Margin	Recommended Rated Working Pressure	Sweet/Sour
Category 0	0 MPa1	1	5.0 MPa	5.2 MPa	Sweet
Category 1A	0.1 - 5.2 MPa	1	7.0 MPa	5.2 MPa	Sweet
Category 1B	5.3 - 10.3 MPa	2	10.0 MPa	20.7 MPa	Sweet
Category 2	10.4 - 24.1 MPa	2	17.0 MPa	34.5 MPa	Sweet or Sour
Category 3	24.2 - 51.7 MPa	2	17.0 MPa	68.9 MPa	Sweet or Sour
Category 4	51.8 - 86.2 MPa	2	17.0 MPa	103.4 MPa	Sweet or Sour
Category 5	86.3 - 103.4 MPa	3	17.0 MPa	137.9 MPa	Sweet or Sour
Critical Sour	Release rate and distance to an urban centre				Sour

- Recommendations for worst case scenario/ minimum guidelines
- Low pressure H2S wells are automatically considered Category 2
- Category 5 place holder for future high pressure challenges

ICoTA

IRP 21 Update

Understanding Table 4- *MASP*

Well Servicing Pressure Categories for Blowout prevention

Well Servicing Pressure Category	MASP	Required Complete Barriers	Recommended Kill Margin	Recommended Rated Working Pressure	Sweet/Sour
Category 0	0 MPa1	1	5.0 MPa	5.2 MPa	Sweet
Category 1A	0.1 - 5.2 MPa	1	7.0 MPa	5.2 MPa	Sweet
Category 1B	5.3 - 10.3 MPa	2	10.0 MPa	20.7 MPa	Sweet
Category 2	10.4 - 24.1 MPa	2	17.0 MPa	34.5 MPa	Sweet or Sour
Category 3	24.2 - 51.7 MPa	2	17.0 MPa	68.9 MPa	Sweet or Sour
Category 4	51.8 - 86.2 MPa	2	17.0 MPa	103.4 MPa	Sweet or Sour
Category 5	86.3 - 103.4 MPa	3	17.0 MPa	137.9 MPa	Sweet or Sour
Critical Sour	Release rate and distance to an urban centre				Sour

- Using only the MASP for pressure category selection

IRP 21 Update

Understanding Table 4- *Complete Barriers*

Well Servicing Pressure Categories for Blowout prevention

Well Servicing Pressure Category	MASP	Required Complete Barriers	Recommended Kill Margin	Recommended Rated Working Pressure	Sweet/Sour
Category 0	0 MPa1	1	5.0 MPa	5.2 MPa	Sweet
Category 1A	0.1 - 5.2 MPa	1	7.0 MPa	5.2 MPa	Sweet
Category 1B	5.3 - 10.3 MPa	2	10.0 MPa	20.7 MPa	Sweet
Category 2	10.4 - 24.1 MPa	2	17.0 MPa	34.5 MPa	Sweet or Sour
Category 3	24.2 - 51.7 MPa	2	17.0 MPa	68.9 MPa	Sweet or Sour
Category 4	51.8 - 86.2 MPa	2	17.0 MPa	103.4 MPa	Sweet or Sour
Category 5	86.3 - 103.4 MPa	3	17.0 MPa	137.9 MPa	Sweet or Sour
Critical Sour	Release rate and distance to an urban centre				Sour

- Pressure category determines number of complete barriers
- Note: removing flow check assembly from BHA removes 1 Complete Barrier regardless of category! An additional complete barrier is required!

ICoTA

IRP 21 Update

Understanding Table 4- *MASP & Kill Margin*

Well Servicing Pressure Categories for Blowout prevention

Well Servicing Pressure Category	MASP	Required Complete Barriers	Recommended Kill Margin	Recommended Rated Working Pressure	Sweet/Sour
Category 0	0 MPa1	1	5.0 MPa	5.2 MPa	Sweet
Category 1A	0.1 - 5.2 MPa	1	7.0 MPa	5.2 MPa	Sweet
Category 1B	5.3 - 10.3 MPa	2	10.0 MPa	20.7 MPa	Sweet
Category 2	10.4 - 24.1 MPa	2	17.0 MPa	34.5 MPa	Sweet or Sour
Category 3	24.2 - 51.7 MPa	2	17.0 MPa	68.9 MPa	Sweet or Sour
Category 4	51.8 - 86.2 MPa	2	17.0 MPa	103.4 MPa	Sweet or Sour
Category 5	86.3 - 103.4 MPa	3	17.0 MPa	137.9 MPa	Sweet or Sour
Critical Sour	Release rate and distance to an urban centre				Sour

- The kill margin in Table 4 is a recommendation for annular kill programs when no other information is available. Different kill margins may be applied provided calculations are performed for the pumped-fluid kill program. The kill procedure plan may include implementation of a circulation method, the lubricate and bleed technique, flowing the well to reduce surface pressure or pumping at lower rates to minimize friction pressure.
- Alternate kill plans or kill margins do not impact the Well Servicing Pressure Category.

ICoTA

IRP 21 Update

Understanding Table 4- *MASP & Kill Margin*

Well Servicing Pressure Categories for Blowout prevention

Well Servicing Pressure Category	MASP	Required Complete Barriers	Recommended Kill Margin	Recommended Rated Working Pressure	Sweet/Sour
Category 0	0 MPa1	1	5.0 MPa	5.2 MPa	Sweet
Category 1A	0.1 - 5.2 MPa	1	7.0 MPa	5.2 MPa	Sweet
Category 1B	5.3 - 10.3 MPa	2	10.0 MPa	20.7 MPa	Sweet
Category 2	10.4 - 24.1 MPa	2	17.0 MPa	34.5 MPa	Sweet or Sour
Category 3	24.2 - 51.7 MPa	2	17.0 MPa	68.9 MPa	Sweet or Sour
Category 4	51.8 - 86.2 MPa	2	17.0 MPa	103.4 MPa	Sweet or Sour
Category 5	86.3 - 103.4 MPa	3	17.0 MPa	137.9 MPa	Sweet or Sour
Critical Sour	Release rate and distance to an urban centre				Sour

IRP **The selected stack shall have a rated working pressure that allows a kill program to be implemented.**

IRP 21 Update

Understanding Table 4- *MASP & MAOP*

Well Servicing Pressure Categories for Blowout prevention

Well Servicing Pressure Category	MASP	Required Complete Barriers	Recommended Kill Margin	Recommended Rated Working Pressure	Sweet/Sour
Category 0	0 MPa1	1	5.0 MPa	5.2 MPa	Sweet
Category 1A	0.1 - 5.2 MPa	1	7.0 MPa	5.2 MPa	Sweet
Category 1B	5.3 - 10.3 MPa	2	10.0 MPa	20.7 MPa	Sweet
Category 2	10.4 - 24.1 MPa	2	17.0 MPa	34.5 MPa	Sweet or Sour
Category 3	24.2 - 51.7 MPa	2	17.0 MPa	68.9 MPa	Sweet or Sour
Category 4	51.8 - 86.2 MPa	2	17.0 MPa	103.4 MPa	Sweet or Sour
Category 5	86.3 - 103.4 MPa	3	17.0 MPa	137.9 MPa	Sweet or Sour
Critical Sour	Release rate and distance to an urban centre				Sour

- MASP determines pressure category for well
- This does not change unless MAOP exceeds rated working pressure for that category

ICoTA

IRP 21 Update

BOP Stack Configurations- *General*

IRP **Working pressure rating of all BOP components shall exceed MASP by the kill margin for the specific well type and reservoir.**

IRP **Working pressure rating of all BOP components shall exceed MAOP by the pressure testing margin and any potential pressure spikes due to the type of operation. Operating pressures during well servicing activities shall not utilize these contingency margins.**

- Must be IRP 5 compliant and therefore flanged
  - Currently under review
  - We believe kill port valves are exempt

ICoTA

IRP 21 Update

BOP Stack Configurations- *Flow point*

- Flow point may be located:
  - Above the BOP
  - Below the BOP
  - Through the “Tree”

IRP 21 Update

BOP Stack Configurations- *Flow point*

- Flow point may be located:
  - Above the BOP
  - Below the BOP
  - Through the “Tree”

IRP 21 Update

BOP Stack Configurations- *Flow point*

- Flow point may be located:
  - Above the BOP
  - Below the BOP
  - Through the “Tree”

IRP 21 Update

BOP Stack Configurations- *Drawings*

- PSAC/ ICoTA member companies surveyed
- Not all companies operate the same BOP configurations
- New drawings created that best represent industry
- Format aligns better with drilling examples
- These are examples only!

IRP 21 Update

BOP Stack Configurations-*Example drawing*

Category 0, MASP= 0.0 MPa, Zero H2S

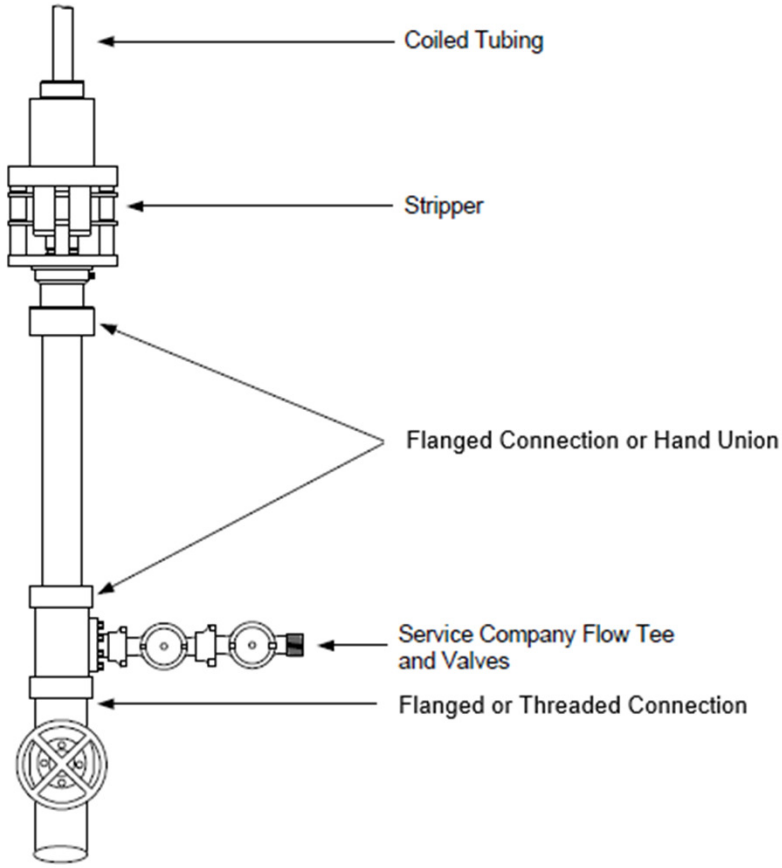

IRP 21 Update

BOP Stack Configurations-*Example drawings*

Category 1A, MASP <= 5.2 MPa, Zero H2S

20.7 MPa Pressure control

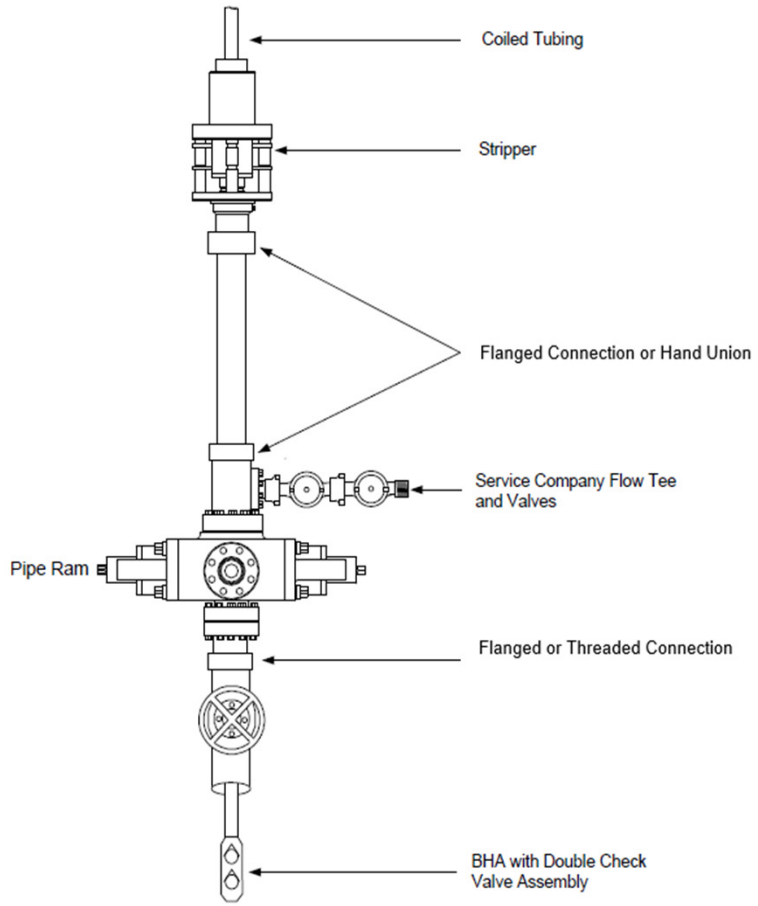

Category 1B, MASP 5.3- 10.3 MPa, Zero H2S

20.7 MPa Pressure control

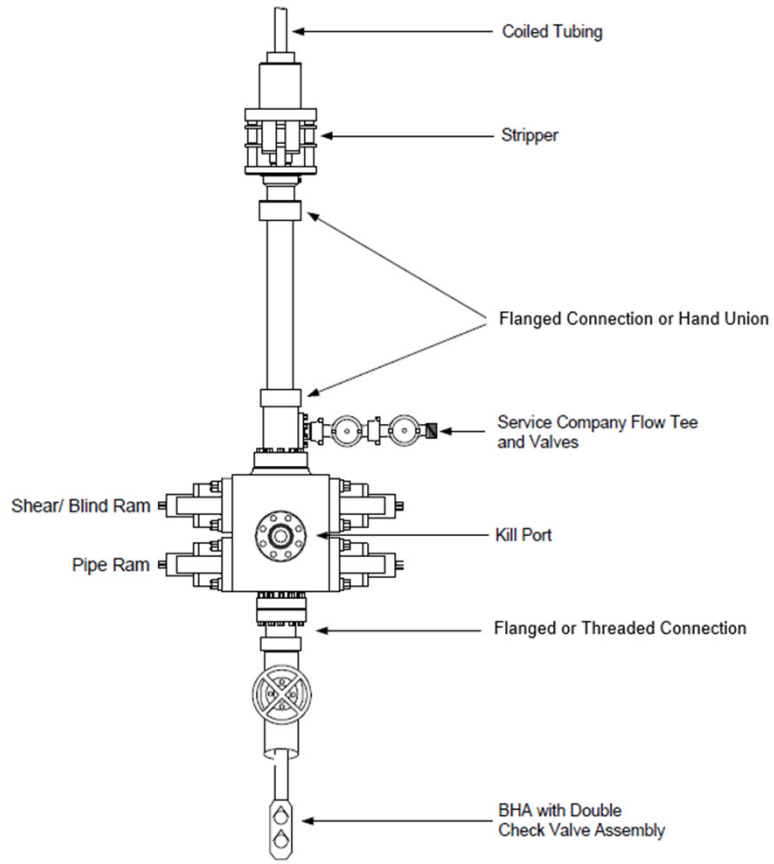

IRP 21 Update

BOP Stack Configurations-*Example drawings*

Category 2, MASP 10.4- 24.1 MPa, Zero H2S, 34.5 MPa Pressure control, **Sweet well**

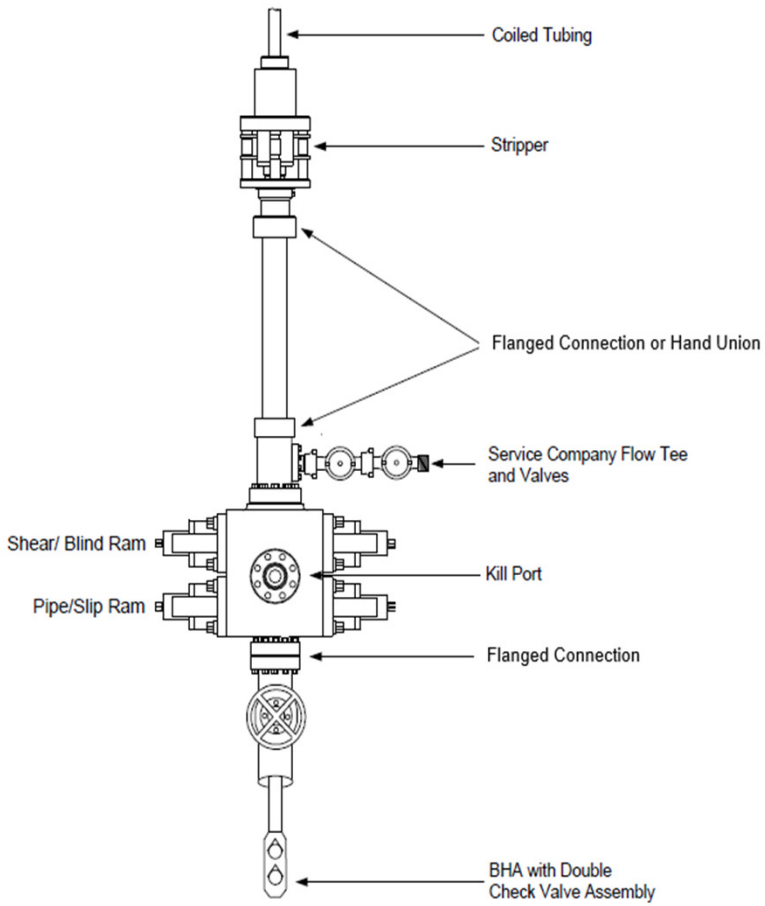

Category 2, MASP 10.4- 24.1 MPa, Zero H2S, 34.5 MPa Pressure control, **Sour well**

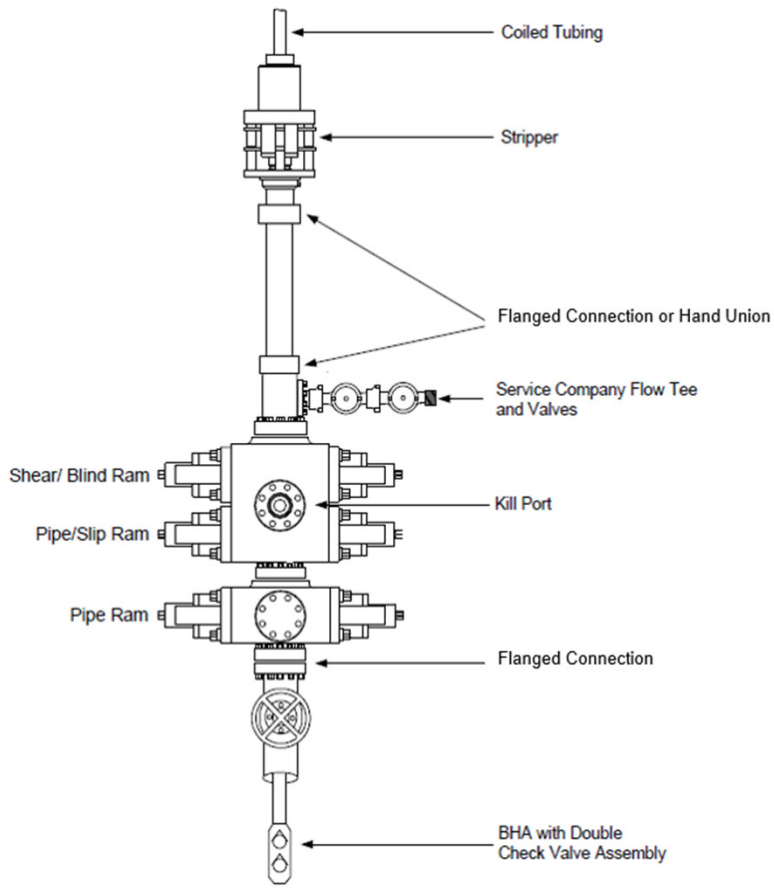

IRP 21 Update

BOP Stack Configurations-*Example drawings*

Category 3, MASP 24.2- 51.7 MPa

68.9 MPa Pressure control, **Sweet well**

Category 3, MASP 24.2- 51.7 MPa

68.9 MPa Pressure control, **Sweet Alternate**

Features

1. Blanking element (no pipe movement)

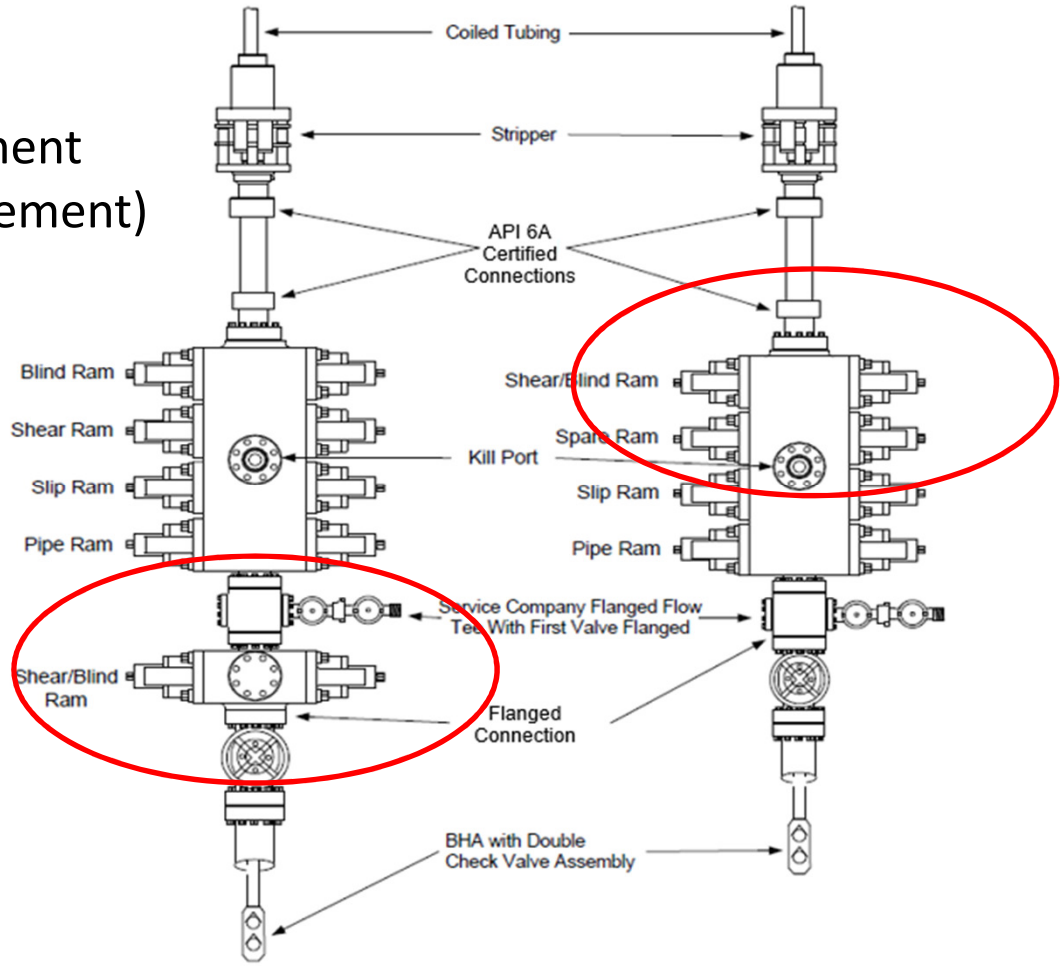

IRP 21 Update

BOP Stack Configurations-*Example drawings*

Category 3, MASP 24.2- 51.7 MPa

68.9 MPa Pressure control, **Sweet well**

Category 3, MASP 24.2- 51.7 MPa

68.9 MPa Pressure control, **Sweet Alternate**

Features

1. Blanking element (no pipe movement)
2. 1 Shearing element min

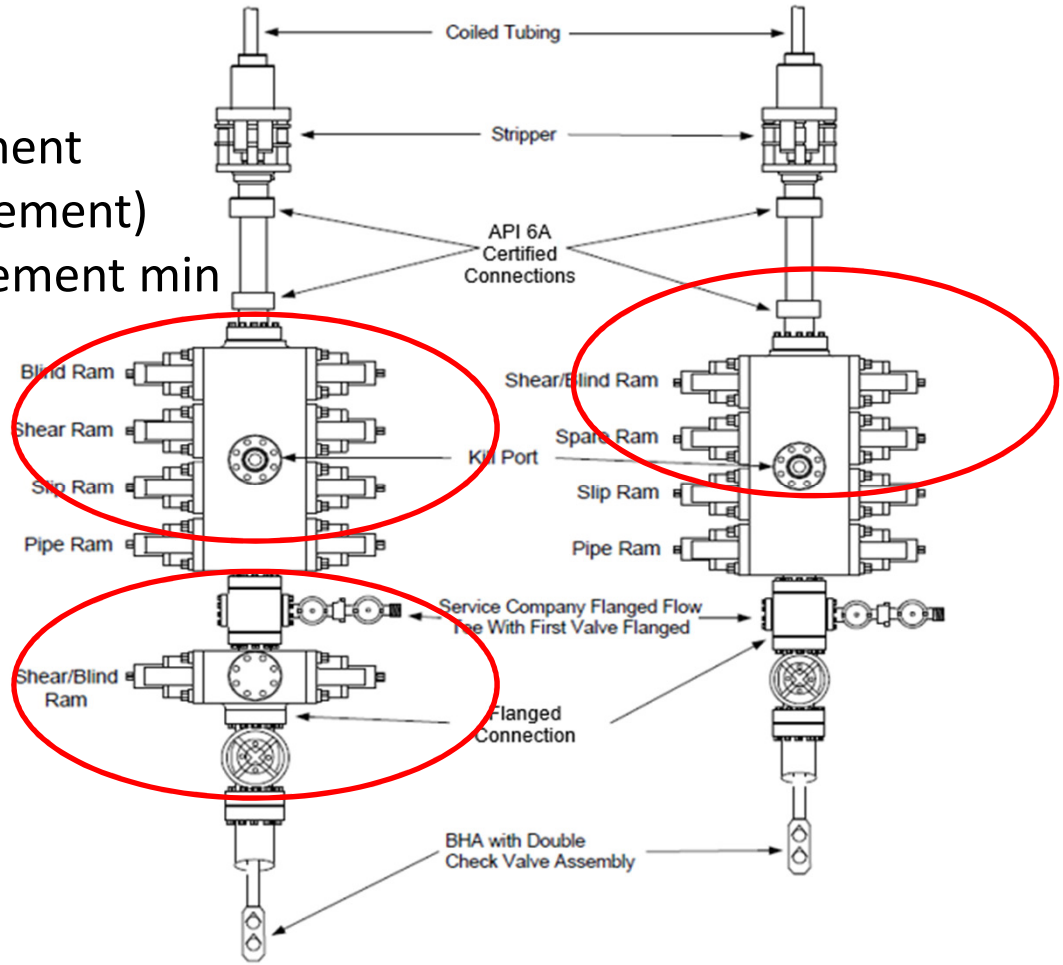

IRP 21 Update

BOP Stack Configurations-*Example drawings*

Category 3, MASP 24.2- 51.7 MPa

68.9 MPa Pressure control, **Sweet well**

Category 3, MASP 24.2- 51.7 MPa

68.9 MPa Pressure control, **Sweet Alternate**

Features

1. Blanking Element (no pipe movement)
2. 1 shearing element min
3. Lubricator connections

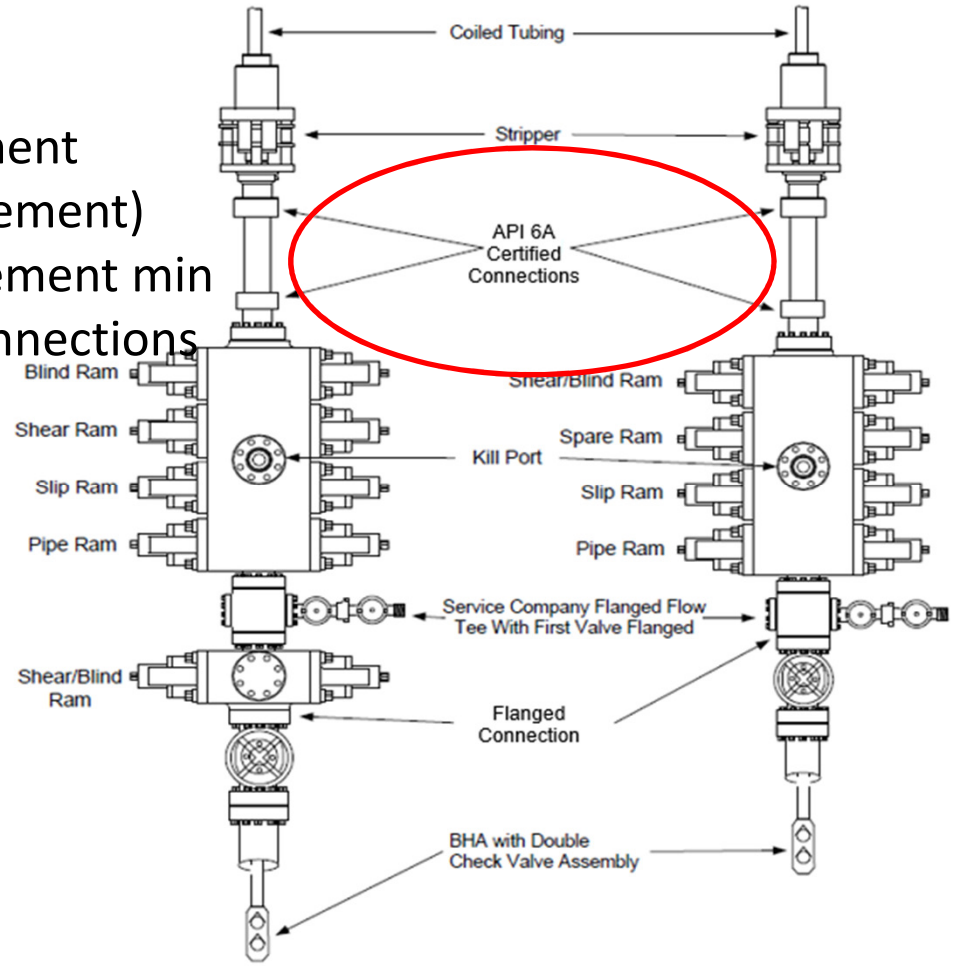

IRP 21 Update

BOP Stack Configurations-*Example drawings*

Category 3, MASP 24.2- 51.7 MPa
68.9 MPa Pressure control, **Sour well**

Category 3, MASP 24.2- 51.7 MPa
68.9 MPa Pressure control, **Sour alternate**

Features

1. Blanking Element (no pipe movement)
2. 1 Shearing element min
3. Lubricator connections

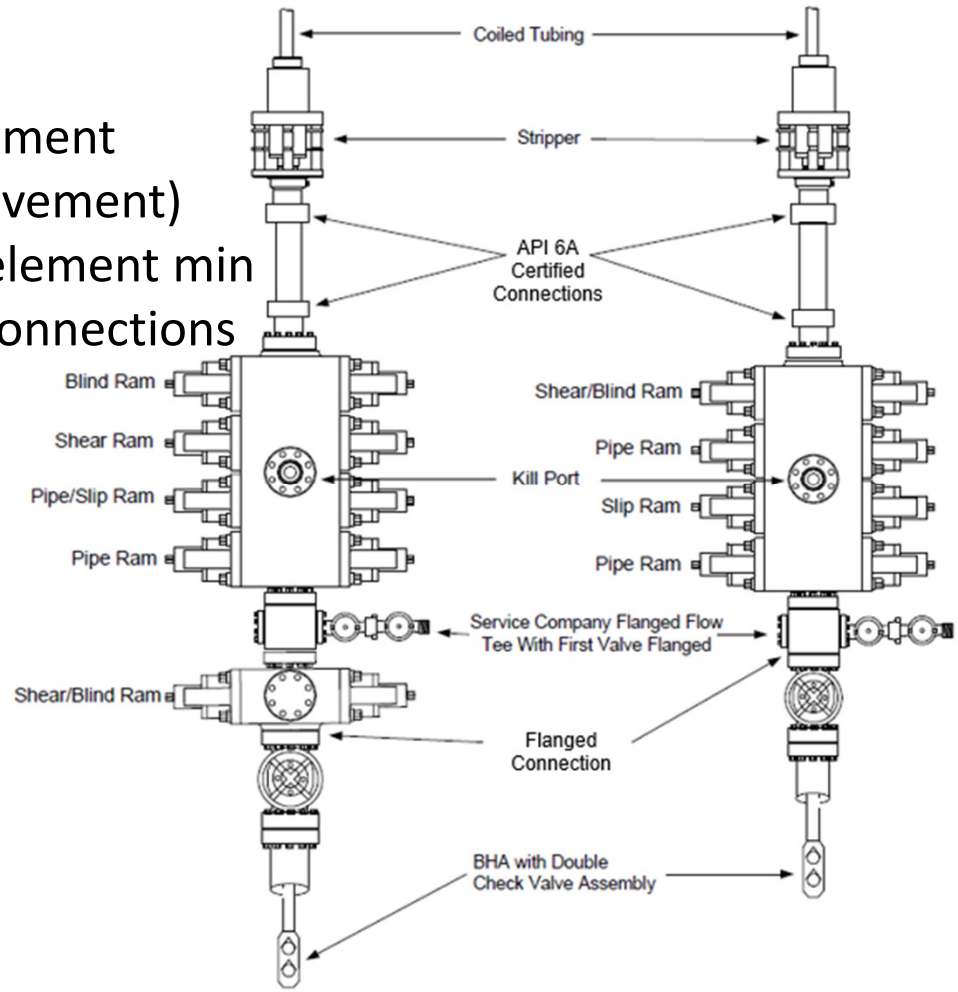

IRP 21 Update

BOP Stack Configurations-*Example drawings*

Category 3, MASP 24.2- 51.7 MPa
68.9 MPa Pressure control, **Sour well**

Category 3, MASP 24.2- 51.7 MPa
68.9 MPa Pressure control, **Sour alternate**

Features

1. Blanking Element (no pipe movement)
2. 1 shearing element min
3. Lubricator connections
4. Additional pipe sealing element

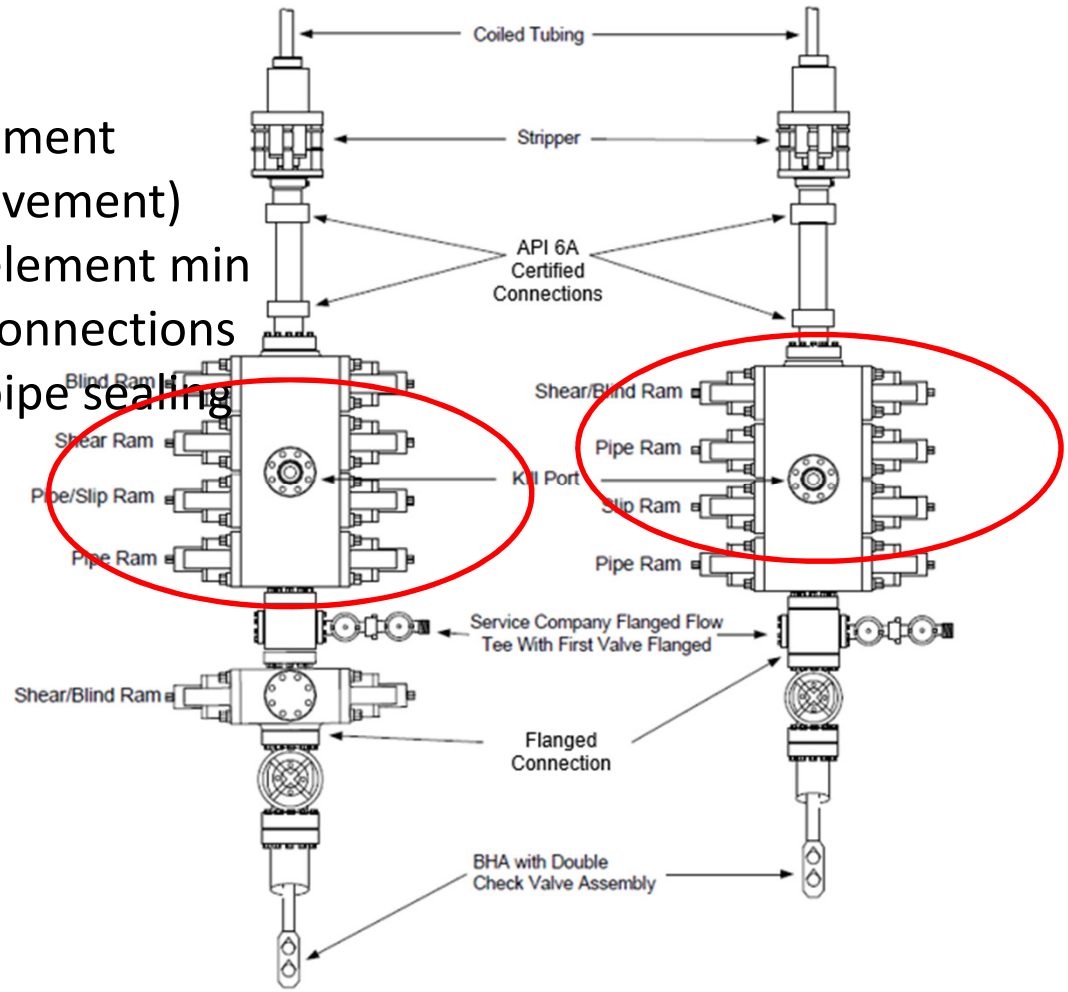

IRP 21 Update

BOP Stack Configurations- *Example drawing*

Category 4, MASP 51.8- 86.2 MPa

103.4 MPa Pressure control, **Sweet or Sour well**

Features

1. 2 Blanking elements

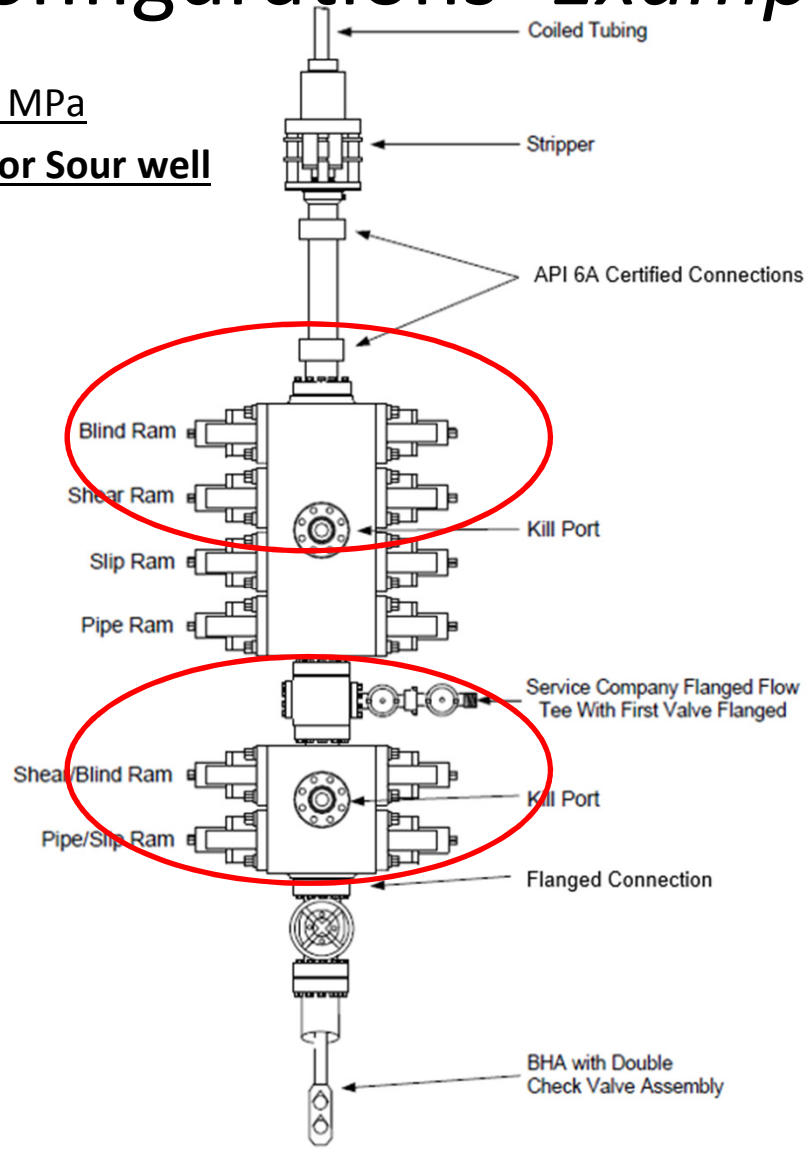

IRP 21 Update

BOP Stack Configurations-Example drawings

Category 4, MASP 51.8- 86.2 MPa

103.4 MPa Pressure control, **Sweet or Sour well**

Features

1. 2 Blanking elements
2. 2 Slip elements

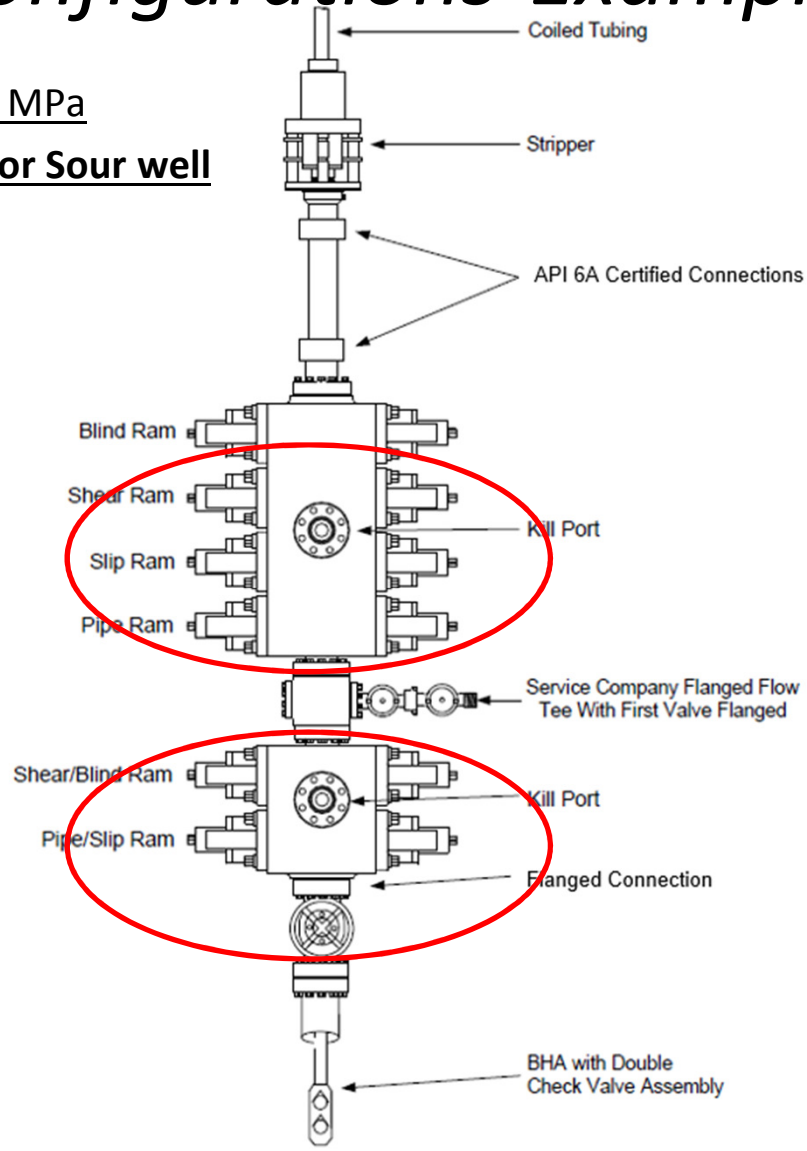

IRP 21 Update

BOP Stack Configurations-Example drawings

Category 4, MASP 51.8- 86.2 MPa

103.4 MPa Pressure control, **Sweet or Sour well**

Features

1. 2 Blanking elements
2. 2 Slip elements
3. 2 Shear elements

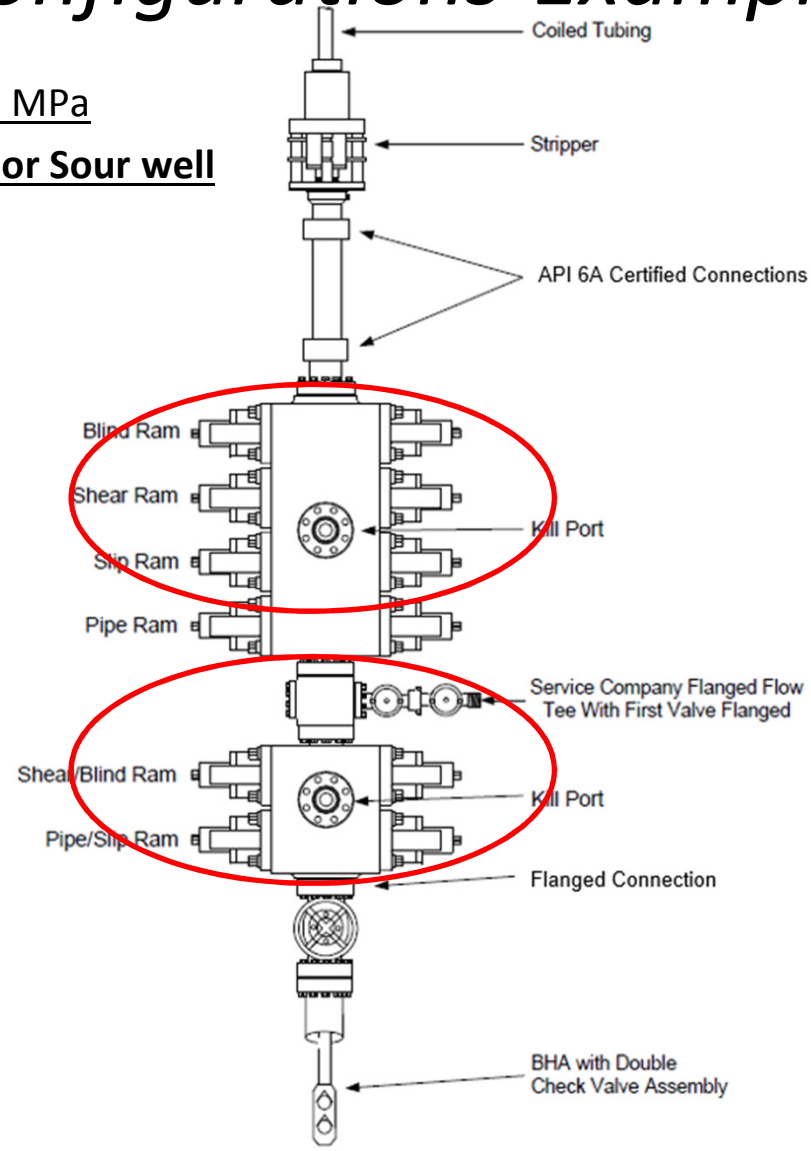

IRP 21 Update

BOP Stack Configurations-Example drawings

Category 4, MASP 51.8- 86.2 MPa

103.4 MPa Pressure control, **Sweet or Sour well**

Features

1. 2 Blanking elements
2. 2 Slip elements
3. 2 Shearing elements
4. Lubricator connections

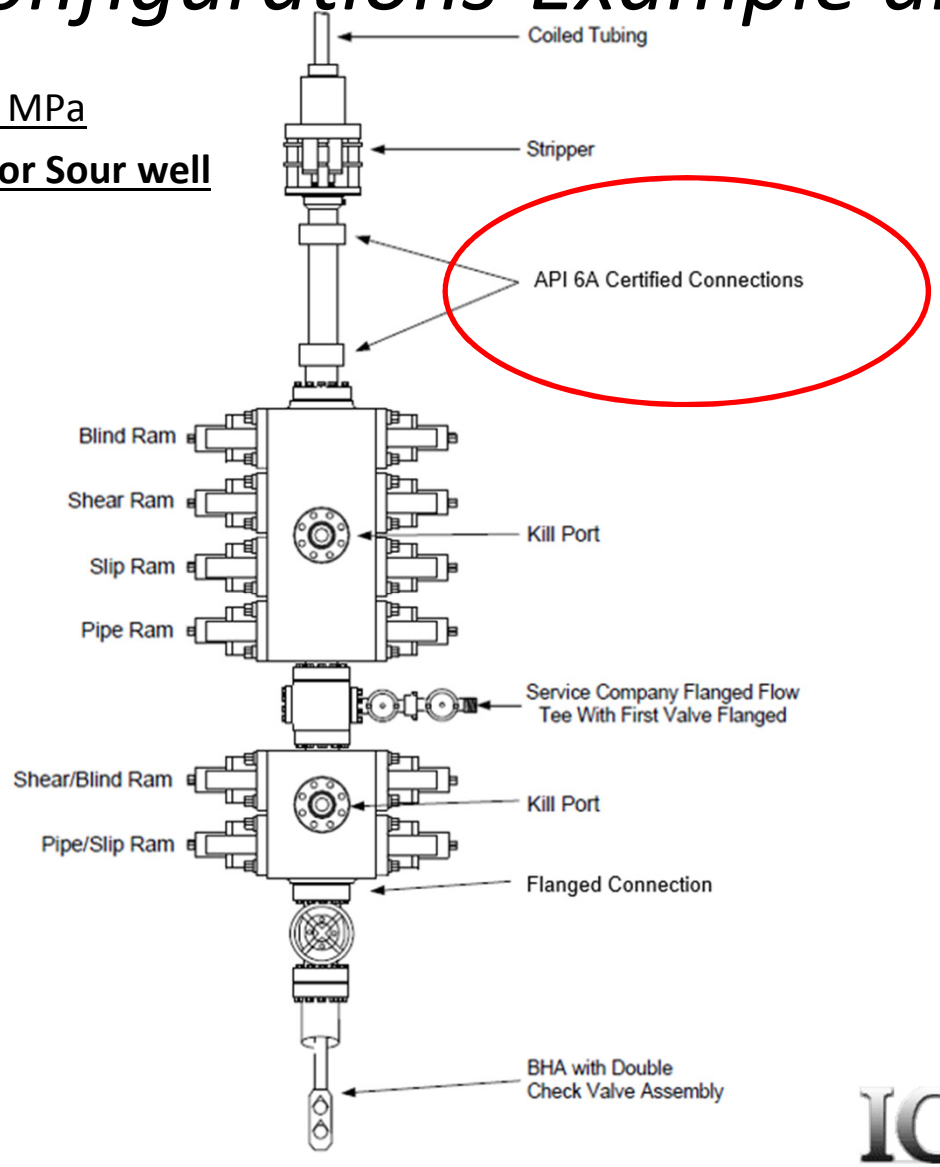

IRP 21 Update

BOP Stack Configurations-Example drawings

Category 4, MASP 51.8- 86.2 MPa

103.4 MPa Pressure control, **Sweet or Sour well**

Features

1. 2 Blanking elements
2. 2 Slip elements
3. 2 Shearing elements
4. Lubricator connections
5. 2 pipe sealing elements in addition to CT stripper

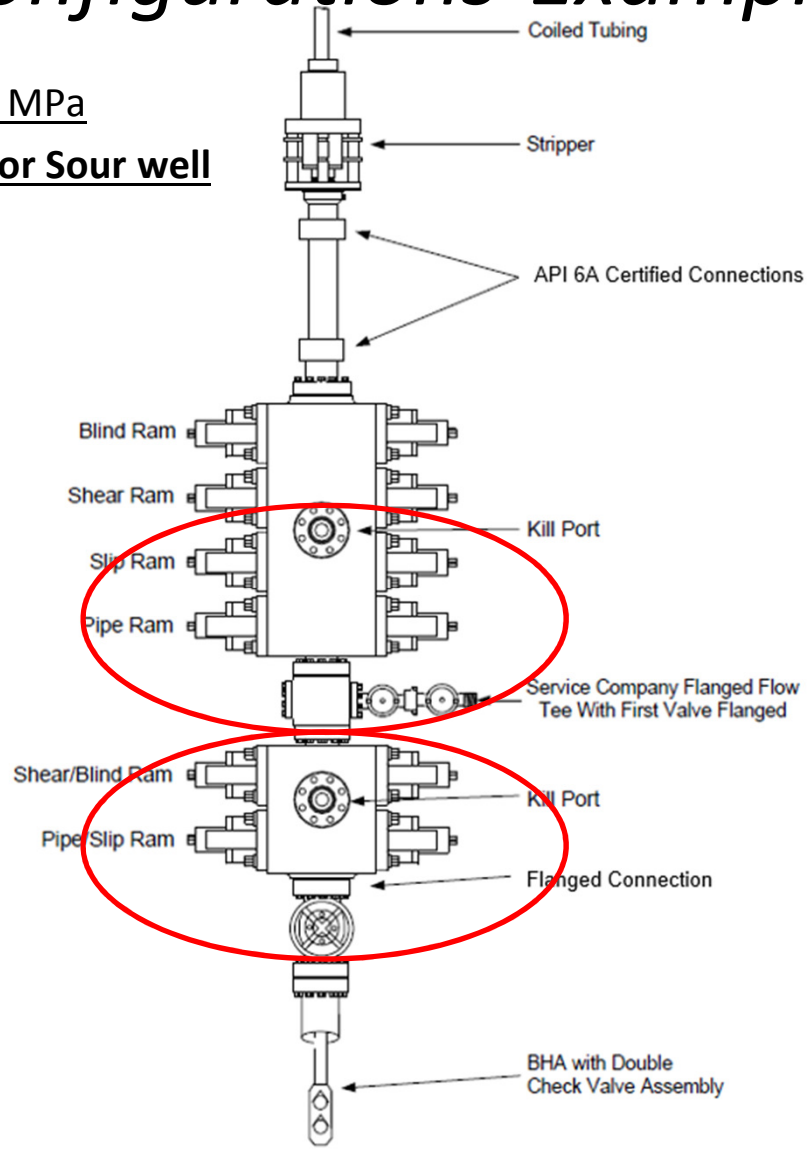

IRP 21 Update

BOP Stack Configurations-Example drawings

Category 4, MASP 51.8- 86.2 MPa

103.4 MPa Pressure control, **Sweet or Sour well**

Features

1. 2 Blanking Elements
2. 2 Slip elements
3. 2 shearing elements
4. Lubricator connections
5. 2 pipe sealing elements in addition to CT stripper
6. Primary & secondary kill ports

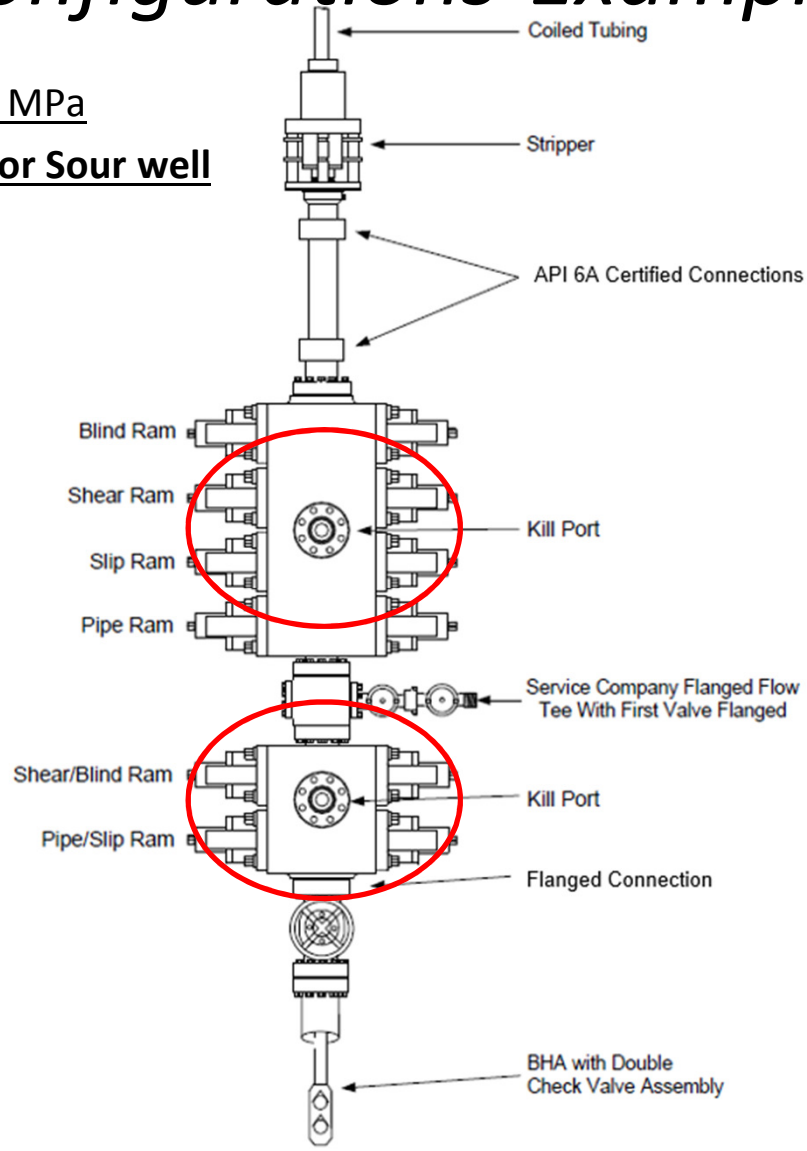

IRP 21 Update

BOP Stack Configurations-Example drawings

Category 5, MASP 86.3- 103.4 MPa

137.9 MPa Pressure control, **Sweet or Sour well**

Features

1. 2 Blanking Elements
2. 2 Slip elements
3. 2 shearing elements
4. Lubricator connections
5. 2 pipe sealing elements in addition to CT stripper
6. Primary & secondary kill ports
7. 1 Shear/ blind element (capable of shearing CT and/or BHA)

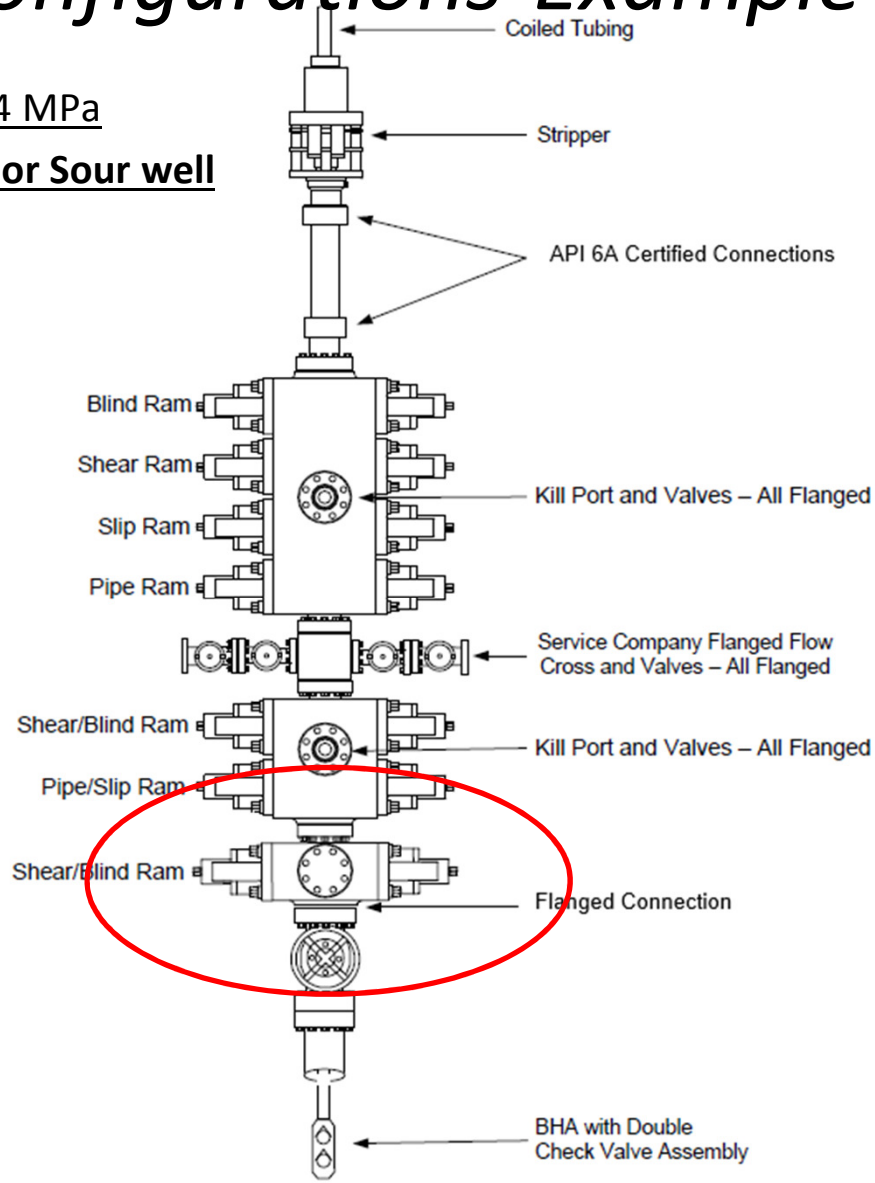

IRP 21 Update

BOP Stack Configurations- *Change summary*

- Category 3
  - Shear/ blind required due to pipe collapse
  - Connections above BOP API 6A certified (Flanged or Hand Unions)
  - Flowing below the BOP with abrasive fluid?
    - Additional shear/blind or pipe ram required!
- Category 4 & up
  - 2 each, blanking, shear, slip, kill ports
  - Connections above BOP API 6A certified (Flanged or Hand Unions)

ICoTA

IRP 21 Update

Special considerations- *Impact to Industry*

- Increased safety and risk mitigation on high pressure coiled tubing operations
- Consistent job planning and standardized pressure control for industry
- Better operator understanding of pressure control requirements
- Better global transfer of CT equipment and personnel training

ICoTA

IRP 21 Update

Special considerations- *Impact to Industry*

- Additional rams required depending on flow point? (Capital costs $$)
- Accumulator volumes may not be adequate? (Capital costs $$)
- Additional BOP's/ rams increase stack height! (Larger cranes, mast unit challenges)

ICoTA

IRP 21 Update

Items out of Scope- *Future reviews*

- Additional section for fracturing w/ CT stack configurations?
- BOP Accumulator section
- Flow back
  - ESD's, Hydraulic valves, choke manifolds & flow lines
  - Flow back through the tree?
- Coiled tubing drilling review
- Other?

IRP 21 Update

Summary

- Limited Scope review driven by:
  - increased operating pressures
  - Addresses unique Canadian operations (Annular fracturing)
  - General need to conform to API 16ST standards
- Pressure categories & well control selection requires kill plan/ margin
- Allows for some flexibility in:
  - Flow point
  - Ram configurations
- 30 day industry review to March 3, 2017


Questions?